eilersen viable

Introducing BUG

Bug is our newest furniture — and the first product in the Eilersen Viable™ collection.

Born from a commitment to craftsmanship and environmental responsibility, Bug rethinks what modern furniture can be: designed for disassembly, built for repair and reuse, and developed with circularity in mind — all while remaining unmistakably Eilersen in comfort and quality.

We’re proud to share that Bug’s environmental impact is one third lower than our most popular lounge chair.

The upholstery come in three special designed textiles developed with Rohleder. developed and selectes.... BUG is also available in all eilersen fabric- and leather collection.

Eilersen Viable

Eilersen Viable™ is our commitment to designing furniture with a lighter footprint and a deeper sense of responsibility.

Every decision — from materials to packaging and logistics — is made to reduce impact while preserving the comfort, longevity, and quality that define Eilersen.

Chair: front view

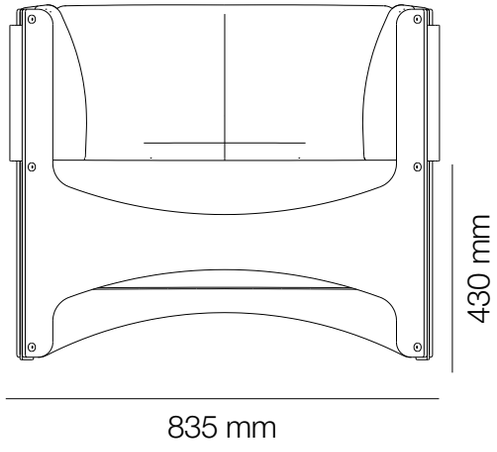

Chair: side view

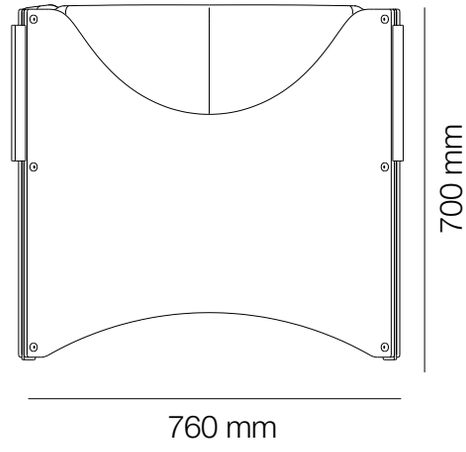

Sofa, 2 seaters: front view

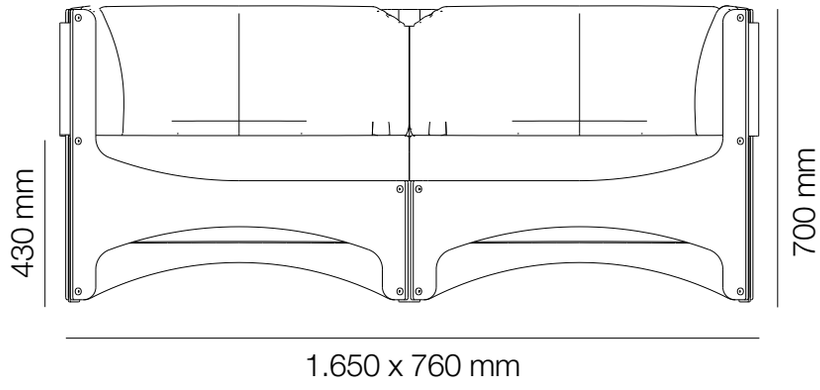

Sofa, 3 seaters: front view

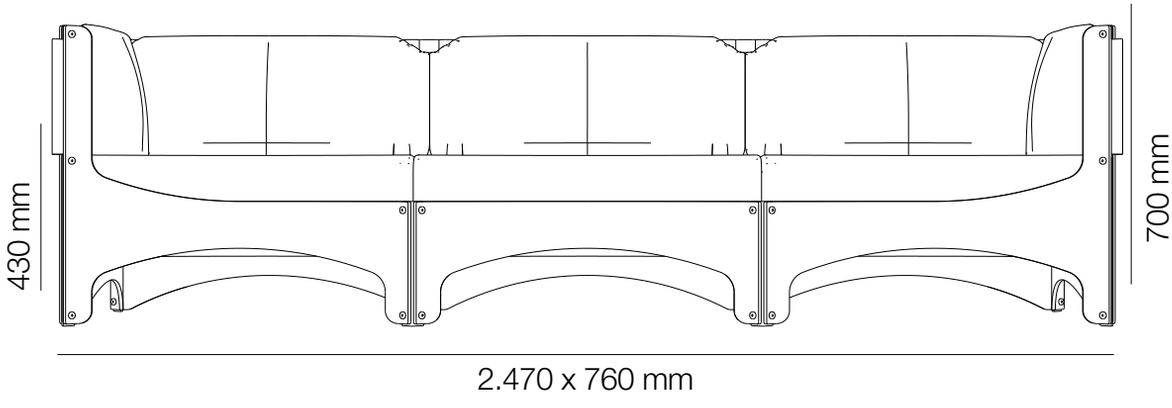

Floorstool: front view

706 x 375 mm

706 x 706 mm

Tableframe: front view

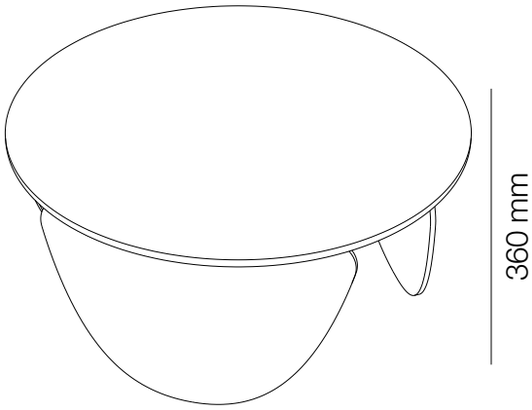

650x650 mm

Tabletop: top view

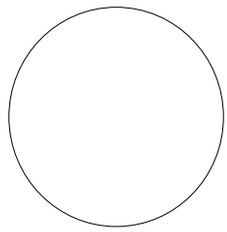

C 800 mm
C 900 mm
C1.000 mm

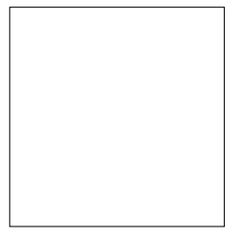

800x800 mm
900x900 mm
1000x1000 mm

Viable is a continuous process

Each new product, and every iteration, reflects new learnings, better methods, and the most responsible opportunities available to us.

It's our way of designing forward — evolving what's possible one product at a time.

Mindfully handmade

Bug is a model that lives up to Eilersen's comfort and handmade quality — while lowering its environmental impact across the board.

It's fully modular and designed for easy assembly and disassembly by the end user. This means parts can be repaired, replaced, or recycled, contributing to longer product life and greater circularity.

Flat-packing helps cut emissions in storage and shipping, and reduces waste from unnecessary packaging — without compromising structural integrity.

And while Bug arrives compact, the unboxing is anything but. We've made sure the experience reflects the same care and refinement as the product itself.

What makes a product Viable

Each Viable product is designed and evaluated using six core principles:

RESOURCE OPTIMIZATION

– Reducing material waste and excess packaging

CIRCULAR DESIGN

– Making products repairable, reusable, and recyclable

ENERGY EFFICIENCY

– Lowering emissions across production and logistics

RESPONSIBLE SOURCING

– Using certified, traceable, and regional materials

PARTNER ENGAGEMENT

– Innovating with suppliers to raise the standard

CUSTOMER TRANSPARENCY

– Sharing data, documentation, and impact clearly

"Throughout the design and product development process, material and production choices were based on analyses rooted in absolute sustainability — and in most environmental impact categories, we succeeded."

CLAUS MØLGAARD
Consultant and professor at Staatliche Hochschulefür Gestaltung, Karlsruhe.

Viable materials

THE VENEER WOOD

White oak

Walnut

THE BOLTS

Stainless steel

Stainless steel brushed

Brass

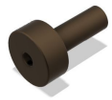

Burnished brass

THE UPHOLSTERY

Plain

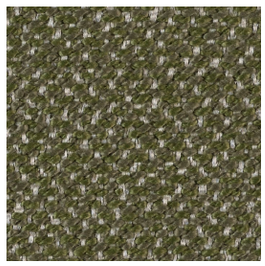
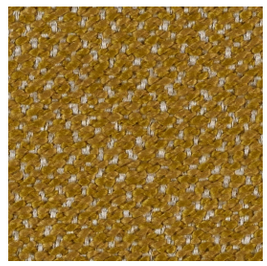

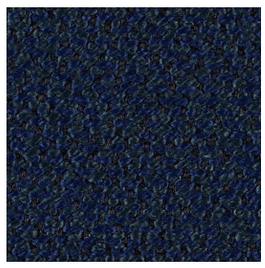

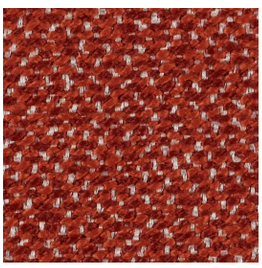

Specification of Material:
DIN EN 14465:
Flat woven. Jacquard. Yarn-died.
100 PES RECYC.
Tensile strength: min. 400 N
Tear Resistance: min. 30 N
Seam slippage strength: max. 4 mm
Abrasion resistance (Martindale) (EN ISO 12947-2) rubs: 25.000
Pilling resistance: min. mark 3-4
Upholstery fabrics color variations: min. level 4
Flammability: DIN EN 1021-1/BS5852 Part 1 Source 0. NFPA 260/261
Color Fastness Crocking: Color Fastness: 6 Crocking dry: 4-5. Wet: 4

Interlocking with pointed items (e.g. jewelry, rivets), contact with Velcro, adhesive tape as well as adhesive labels can pilling cannot be avoided and can also occur as a result of adhesion of fibres from clothing or other textile fibres cause pulling of loops or roughening of surface. This can also be caused by pets or exposure to other inappropriate circumstances.
Pilling cannot be avoided and can also occur as a result of adhesion of fibres from clothing or other textile fibres.
Every flat woven fabrics will show a certain amount of roughening with use.
Important: soiling and jeans crocking are noticeable sooner and ar more obvious on light-coloured fabrics than on dark fabrics
Due to the extremely fluffy and open fabric surface, this cover is more prone to roughening in use than our existing Q2 fabric qualities.
Shrinkage when washed: In warp direction:
0.8% In weft/fill direction: 0,5%
Shrinkage when dry cleaned: In warp direction:
1,0% In weft/fill direction: 0,6%
Machine wash 30° gentle cycle. Delicate dry cleaning. Bleaching allowed. Tumble dry low temperature. No heat source.

Woody

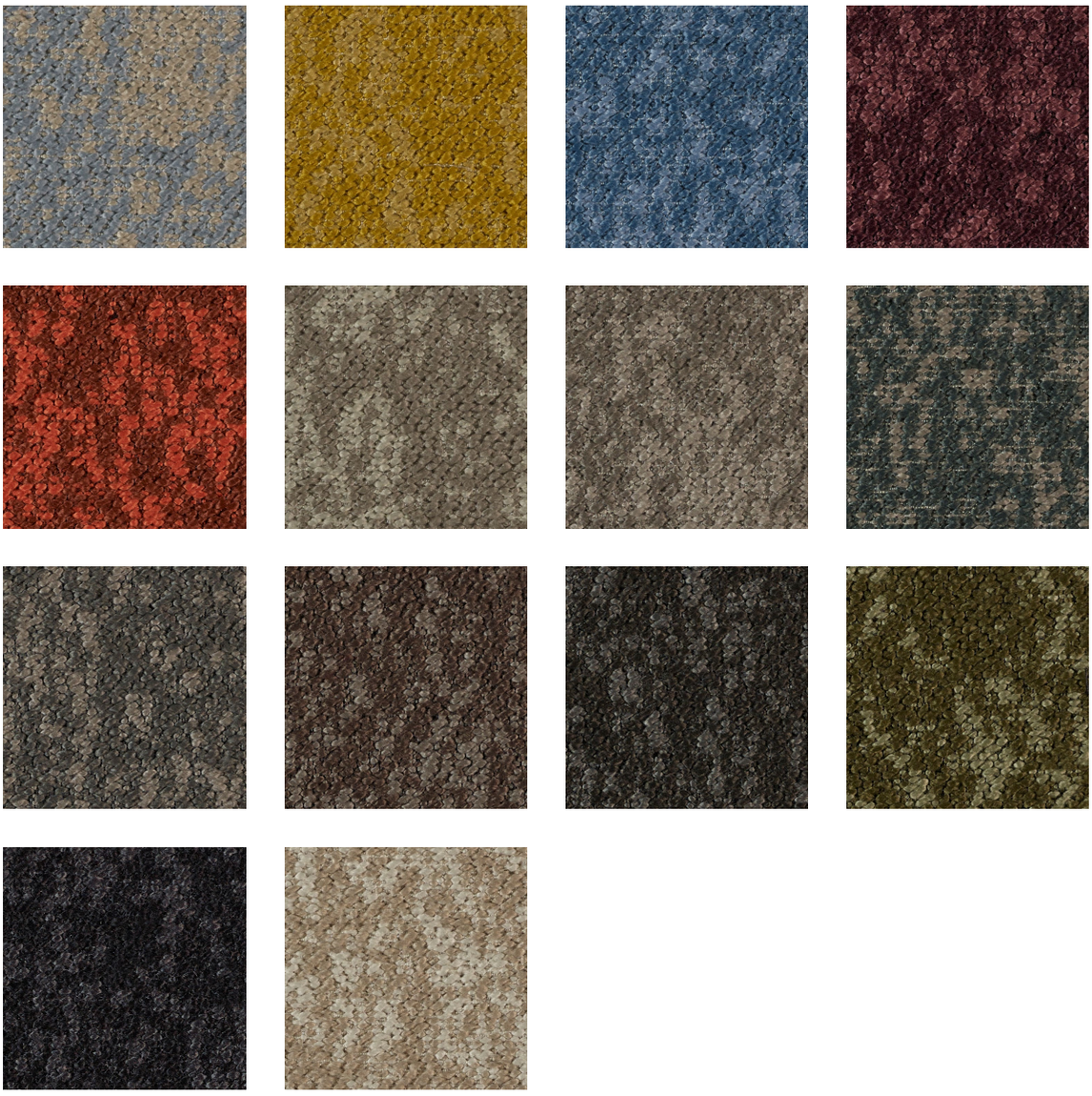

Specification of Material:
DIN EN 14465:
Flat woven. Jacquard. Yarn-died.
100 PES RECYC.
Tensile strength: min. 400 N
Tear Resistance: min. 30 N
Seam slippage strength: max. 5 mm
Abrasion resistance (Martindale) (EN ISO 12947-2) rubs: 90.000
Pilling resistance: min. mark 3-4
Upholstery fabrics color variations: min. level 4
Flammability: DIN EN 1021-1/BS5852 Part 1 Source 0. NFPA 260/261
Color Fastness Crocking: Color Fastness: 6 Crocking dry: 4-5. Wet: 4

Interlocking with pointed items (e.g. jewelry, rivets), contact with Velcro, adhesive tape as well as adhesive labels can pilling cannot be avoided and can also occur as a result of adhesion of fibres from clothing or other textile fibres cause pulling of loops or roughening of surface. This can also be caused by pets or exposure to other inappropriate circumstances.
Pilling cannot be avoided and can also occur as a result of adhesion of fibres from clothing or other textile fibres.
Every flat woven fabrics will show a certain amount of roughening with use.
Important: soiling and jeans crocking are noticeable sooner and ar more obvious on light-coloured fabrics than on dark fabrics
Due to the extremely fluffy and open fabric surface, this cover is more prone to roughening in use than our existing Q2 fabric qualities.
Shrinkage when washed: In warp direction:
0.8% In weft/fill direction: 0,5%
Shrinkage when dry cleaned: In warp direction:
1,0% In weft/fill direction: 0,6%
Machine wash 30° gentle cycle. Delicate dry cleaning. Bleaching allowed.Tumble dry low temperature. Cool iron. No heat source.

Spotty

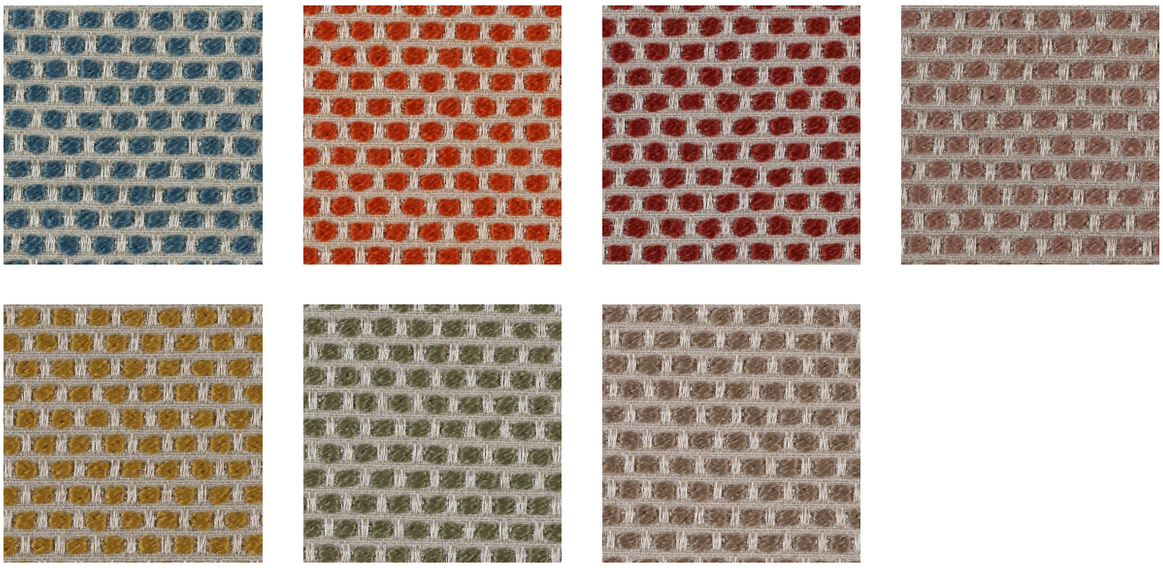

Specification of Material:
DIN EN 14465:
Flat woven. Jacquard. Yarn-died.
100 PES RECYC.
Tensile strength: min. 400 N
Tear Resistance: min. 30 N
Seam slippage strength: max. 4 mm
Abrasion resistance (Martindale) (EN ISO 12947-2) rubs: 25.000
Pilling resistance: min. mark 3-4
Upholstery fabrics color variations: min. level 4
Flammability: DIN EN 1021-1/BS5852 Part 1 Source 0. NFPA 260/261
Color Fastness Crocking: Color Fastness: 6 Crocking dry: 4-5. Wet: 4

Interlocking with pointed items (e.g. jewelry, rivets), contact with Velcro, adhesive tape as well as adhesive labels can pilling cannot be avoided and can also occur as a result of adhesion of fibres from clothing or other textile fibres cause pulling of loops or roughening of surface. This can also be caused by pets or exposure to other inappropriate circumstances.
Pilling cannot be avoided and can also occur as a result of adhesion of fibres from clothing or other textile fibres.
Every flat woven fabrics will show a certain amount of roughening with use.
Important: soiling and jeans crocking are noticeable sooner and ar more obvious on light-coloured fabrics than on dark fabrics
Due to the extremely fluffy and open fabric surface, this cover is more prone to roughening in use than our existing Q2 fabric qualities.
Shrinkage when washed: In warp direction:
0.8% In weft/fill direction: 0,5%
Shrinkage when dry cleaned: In warp direction:
1,0% In weft/fill direction: 0,6%
Machine wash 30° gentle cycle. Delicate dry cleaning. Bleaching allowed.Tumble dry low temperature. No heat source.

Why we do what we do

The Viable collection reflects a larger ambition. One that shapes our choices today and sets the course for tomorrow.

VISION

Eilersen envisions a future where timeless design, luxurious comfort, and environmental responsibility are seamlessly integrated. We aim to lead the furniture industry by setting a new standard — where every product reflects craftsmanship, quality, and deep care for the planet.

MISSION
Our mission is to optimize the entire lifecycle of our furniture, minimizing environmental impact through reduced waste and smart use of resources.
From carefully selected materials and production methods to packaging and transport, we create furniture that lasts generations, supports circularity, and continually sets new

Eilersen Viable BUG, 2-seater Sofa Climate Footprint:

TOTAL CLIMATE IMPACT
300 KG CO2-E
Best case: 250 Kg CO2-e
Worst case: 340 Kg CO2-e

Eilersen Streamline, 2-seater Sofa Climate Footprint:

TOTAL CLIMATE IMPACT
450 KG CO2-E
Best case: 330 Kg CO2-e
Worst case:490 Kg CO2-e

MATERIALS
44,2 kg CO2eq

UPHOLSTERY
63,1 kg CO2eq

COVER
24,3 kg CO2eq

PRODUCTION WAISTE
5,7/

PRODUCTION
42,2 kg CO2eq

PACKAGING
29,0 kg CO2eq

TRANSPORT
15,7 kg CO2eq

USE PHASE
32,5 kg CO2eq

Download full rapport for
Eilersen Viable BUG Sofa, 2 seaters

Download Målbar Verification level and communication guideline
Verification level and communication

At Eilersen, we see Bug as more than a chair — it's a glimpse of a new normal. A proof of concept that shows how luxury and responsibility can coexist, beautifully. Through continued innovation and alignment with the UN's 2030 Agenda, we're building better furniture and a better future.

For more information visit:
eilersen.eu/products/viable/bug/